Cod: 113610060242909

90° corner refrigerated display cabinet with ventilation, closed design, straight glass panels, remote motor, white, +2 to +6 °C, 122×122 cm, height 106.4 cm

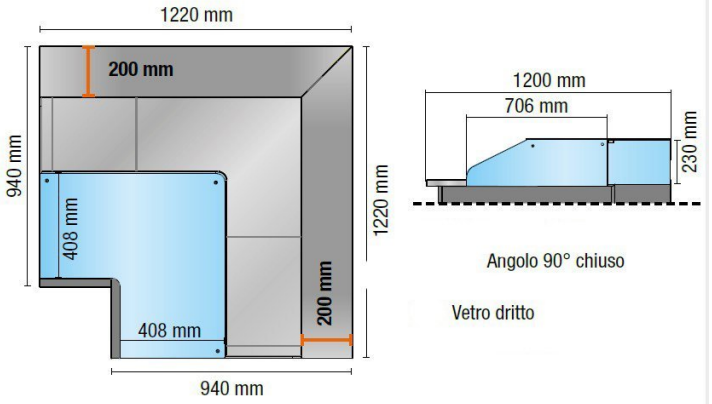

Description

Refrigerated display unit, with straight tempered glass panels, at a 90° angle
. Fitted with 2 open compartments, complete with
. Suitable for displaying pastries and pralines.
The product features:

- Sheet metal side panels with a tempered glass side;
- Electronic control panel;
- Ceiling light with LED lighting;
- 2 open compartments, complete with an intermediate shelf;
- Condensate evaporation tray fitted with a PTC heating element;

. 100% Made in Italy.

Technical specifications

Climate class	3
Cooling capacity	0.635 kW
Exhibition space	0.74 Mq
Frequency	50 Hz
Operating temperature	+2 +6 °C
Power consumption (standard specification)	0.01 kW
Power consumption of the lighting (standard fit)	0.02 kW
Power supply	Electric
Refrigerant gas	R452A
Refrigeration	ventilated
Voltage	220 V, 240 V