Cod: 113610060242911

90° corner refrigerated display cabinet with ventilation, closed design, straight glass panels, remote-controlled motor, with 2 intermediate shelves, white, +2 to +6 °C, 122×122 cm, height 138.4 cm

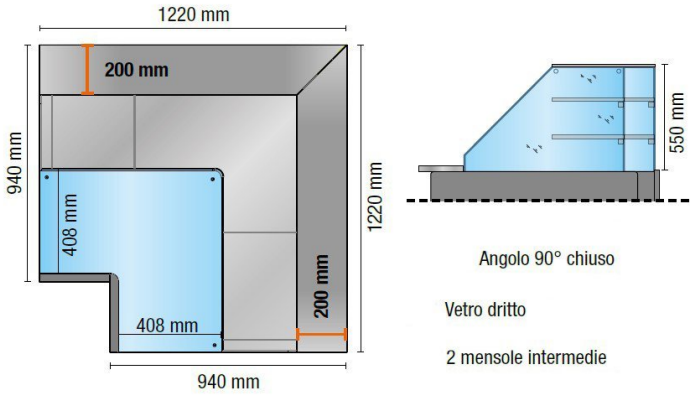

Description

Refrigerated display unit, with straight tempered glass panels, at a 90° angle
. Fitted with 2 open compartments, complete with
. Suitable for displaying pastries and pralines.
The product features:

- Sheet metal side panels with a tempered glass side;
- Electronic control panel;
- Ceiling light with LED lighting;
- 2 intermediate shelves in toughened glass, complete with lighting;
- 2 open compartments, each with a middle shelf;
- Condensate evaporation tray fitted with a PTC heating element;

. 100% Made in Italy.

Technical specifications

Climate class	3
Cooling capacity	0.635 kW
Exhibition space	1.10 Mq
Frequency	50 Hz
Operating temperature	+2 +6 °C
Power consumption (standard specification)	0.01 kW
Power consumption of the lighting (middle shelf)	0.04 kW
Power consumption of the lighting (standard fit)	0.02 kW
Power supply	Electric
Refrigerant gas	R452A
Refrigeration	ventilated
Voltage	220 V, 240 V