??: 113590010242907

90°??????????????????????????????????+2?+6 °C???116.3×116.3?????122.4??

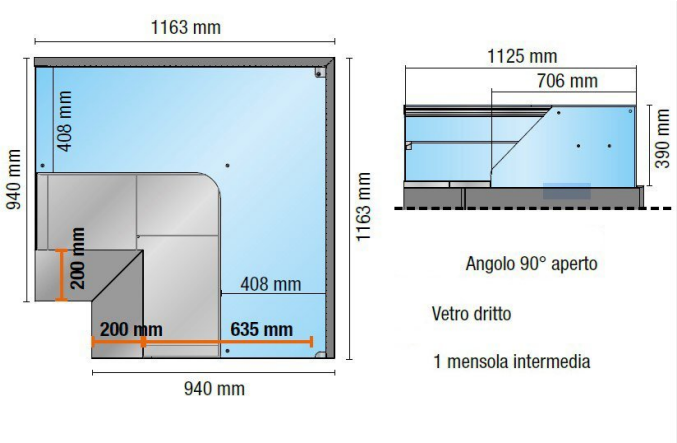

??

??????????????????90°
????2????????????
????????????????
????????

- ??????????????????
- ???????
- ?LED??????
- 1???????????????
- 2???????????????
- ?PTC???????????

. 100%??????

?????

??	???
???	R452A
???	0.635 kW
????????	0.01 kW
????	1.67 Mq
????	+2 +6 °C
????	3
???????????	0.02 kW
????????????	0.02 kW
??	220 V, 240 V
??	??
??	50 Hz