**??: 113610020242910**

**90°??????????????????????????????????????????+2?+6 °C???122×122?????122.4??**

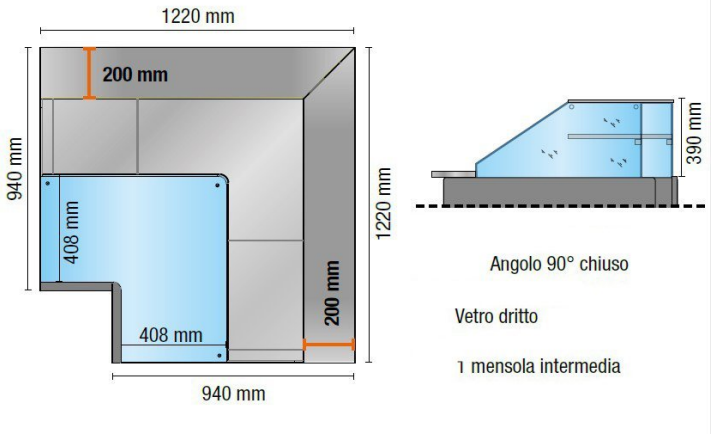


**??**

??????????????????90°
????2????????????
????????????????
????????

- ??????????????????
- ???????
- ?LED??????
- 1???????????????
- 2???????????????
- ??PTC???????????

. 100%??????

**?????**

| | |
|---|---|
| ?? | ??? |
| ??? | R452A |
| ??? | 0.635 kW |
| ???????? | 0.01 kW |
| ???? | 0.92 Mq |
| ???? | +2 +6 °C |
| ???? | 3 |
| ??????????? | 0.02 kW |
| ???????????? | 0.02 kW |
| ?? | 220 V, 240 V |
| ?? | ?? |
| ?? | 50 Hz |